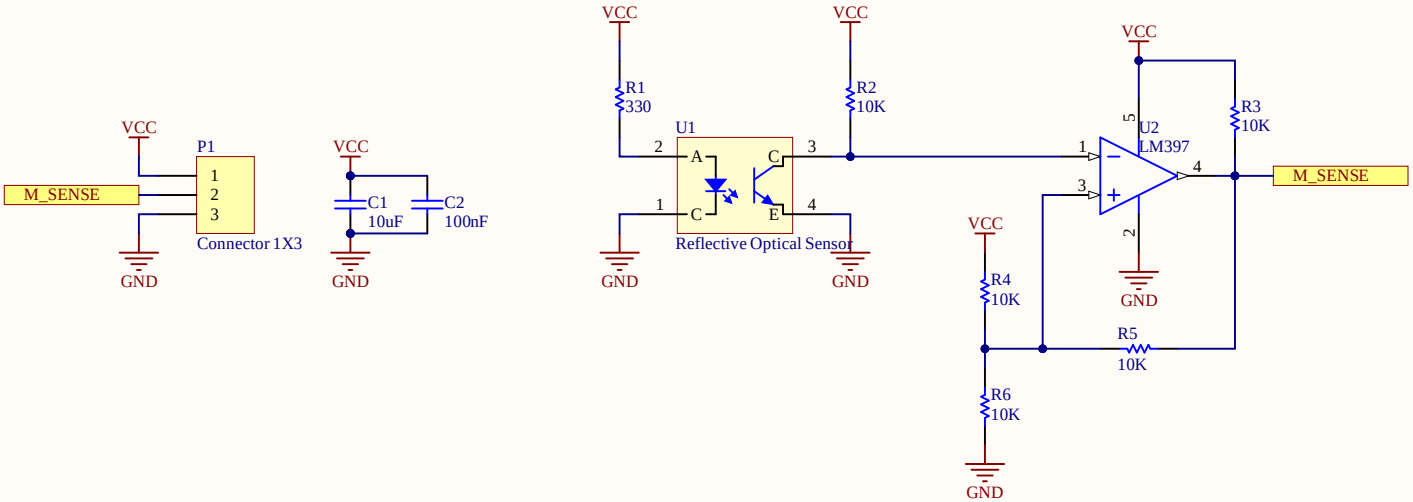

Title	***Motor Encoder***		
Size: A4	Number: 1	Revision: V1	
Date: 19/07/2021	Time: 21:08:46	Sheet 1 of 1	